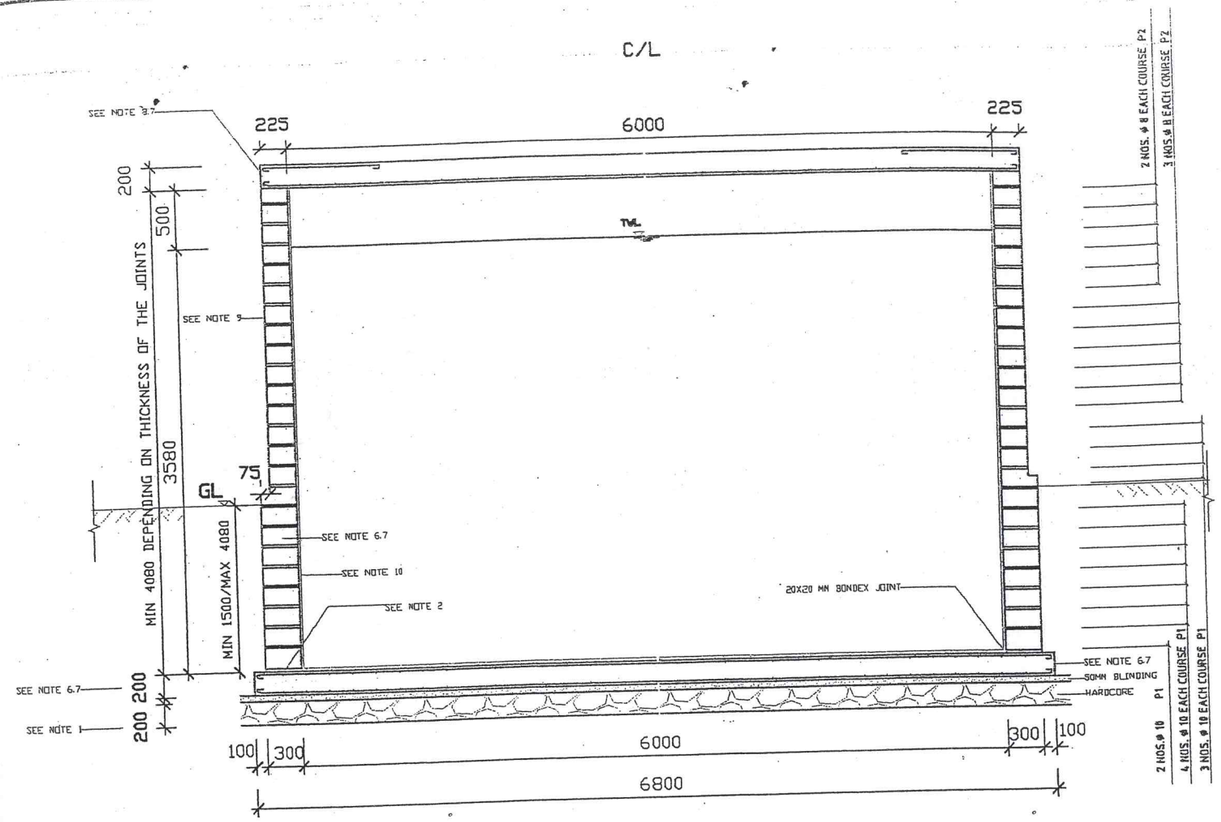

CROSS SECTION
SCALE 1:50

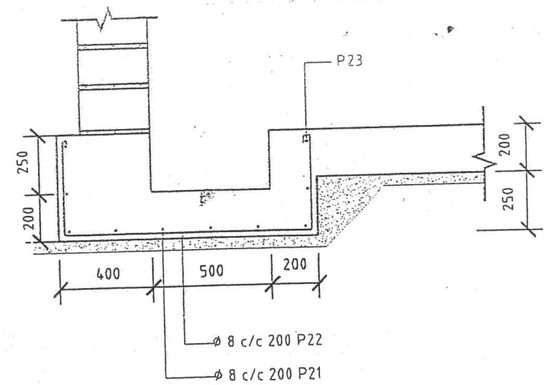

SUMP - CROSS SECTION
SCALE 1:25

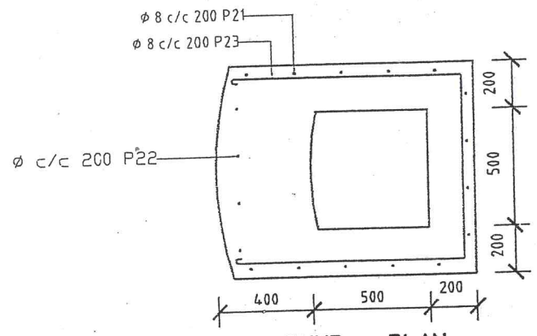

SUMP - PLAN
SCALE 1:25

MINISTRY OF WATER & IRRIGATION- MAJI HOUSE

100M³ GROUND LEVEL MASONRY STORAGE TANK (NOTES)

			SHEET 1 OF 3
DRAWN	K. KAKUI		SCALE: AS SHOWN
DIGITIZED	ALUCHIO M.F	JUNE 2009	DRG. NO.
CHECKED	ENG. B.I KASABULI	JUNE 2009	M.W.I
APPROVED	D.W.S	JUNE 2009	013-TYPE-085